Deutschmann

*your ticket to all buses*

# Instruction manual
# Dynamic switching accelerator
# SPEEDY


**Deutschmann Automation GmbH & Co. KG**
**www.deutschmann.com | wiki.deutschmann.de**

Handbuch Art.-Nr: V3140E

Foreword

This operating manual provides users and OEM customers with all the information necessary for the installation and operation of the product described in this manual.

All details contained in this manual have been checked carefully, however, they do not represent an assurance of product characteristics. No liability can be accepted for errors. DEUTSCHMANN AUTOMATION reserves the right to carry out alterations to the described products in order to improve the reliability, function or design thereof. DEUTSCHMANN AUTOMATION only accepts liability to the extent as described in the terms and conditions of sale and delivery.



Bad Camberg, January 2020

# 1 Introduction

## 1.1 On this manual

This manual documents installation, functions and operation of the Deutschmann unit specified on the cover sheet and in the header.

### 1.1.1 Symbols

Particularly **important text sections** can be seen from the adjacent pictogram.

You should **always** follow this information since, otherwise, this could result in malfunctions or operating errors.

### 1.1.2 Suggestions

We are always pleased to receive suggestions and wishes etc. and endeavour to allow for these. It is also helpful if you bring our attention to any errors.

# 2 EMC Directives for products of Deutschmann Automation

The installation of our products has to be carried out considering the relevant EMC directives as well as our internal instructions.

For more information see ’EMC Directives’ on our homepage at http://www.deutschmann.de.

# 3 Fields of application

When switching on and also switching off magnetic controlled connecting devices delays appear that consist of two components:

- delay period for building up or reducing the magnetic field
- delay period time lag to overcome the mechanical inertia

To shorten the delay period SPEEDY offers the possibility to achieve an overexcitation of the magnetic field by an over-voltage impulse of 100V, adjustable from 1ms to 10ms. Therefore the mechanical inertia can be overcome faster.

When switching off the delay period for the reduction of the magnetic field is considerably decreased by a negative free wheeling voltage.

The status of the inputs and outputs, also of the supply voltages, is optionally displayed by integrated LEDs.

SPEEDY has different switching modes, which are externally adjustable. They are described in detail in the following chapters.

# 4 Installation, connection and display

## 4.1 Dimensions and mounting

SPEEDY is supplied in a plastic housing for snap-mounting onto a commercially available EN mounting rail.
The dimensions are shown in the drawing below:

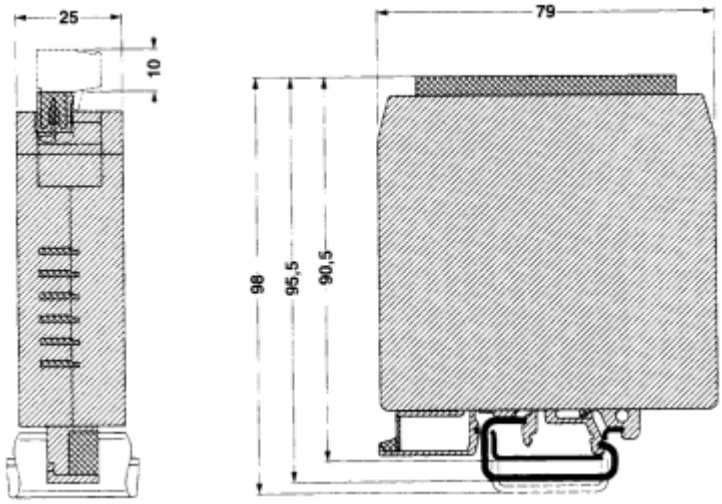


**Picture 1: Dimensional drawing SPEEDY**

## 4.2 Terminal assignment

SPEEDY is connected via a 10-pin screw-plug connector. The following terminal assignment applies:

| Terminal | Function |
|---|---|
| 1 | GND (reference for terminal 3-6) |
| 2 | GND (reference for terminal 3-6) |
| 3 | Input 4 (24V/max. 10mA) |
| 4 | Input 3 (24V/max. 10mA) |
| 5 | Input 2 (24V/max. 10mA) |
| 6 | Input 1 (24V/max. 10mA) |
| 7 | Output 2 (max. 1A) |
| 8 | Output 1 (max. 1A) |
| 9 | GND (reference for terminal 7, 8 and 10) |
| 10 | 10... 30V (max. 3A) |

### 4.2.1 Option X79 - 42V holding level

For devices with this option the holding level of 42V is supplied through PIN1. In other respects the device acts as a standard device SPEEDY.

The following assignment applies:

| Terminal | Function |
|---|---|
| 1 | Input holding level 42V (max. 50V) |
| 2 | GND (reference for terminal 3-6) |
| 3 | Input 4 (24V/max. 10mA) |
| 4 | Input 3 (24V/max. 10mA) |
| 5 | Input 2 (24V/max. 10mA) |
| 6 | Input 1 (24V/max. 10mA) |
| 7 | Output 2 (max. 1A) |
| 8 | Output 1 (max. 1A) |
| 9 | GND (reference for terminal 7, 8 and 10) |
| 10 | 10... 30V (max. 3A) |

## 4.3 LEDs

SPEEDY has 8 LEDs with the following meaning:

| LED over terminal | Color | Meaning |
|---|---|---|
| 3 | Red | Input 4 |
| 4 | Red | Input 3 |
| 5 | Red | Input 2 |
| 6 | Red | Input 1 |
| 7 | Green | Output 2 |
| 8 | Green | Output 1 |
| 9 | Green | Internal voltage supply ok |
| 10 | Green | External voltage supply ok |

# 5 SPEEDY switching modes

## 5.1 Setting the switching modes

The switching modes described below are selected via a rotary coding switch.
The following assignment applies:

| Rotary-switch indication | Switching mode | Input interference suppression |
|---|---|---|
| 0 | 1 | Switched off |
| 1 | 2 | Switched off |
| 2 | 3 | Switched off |
| 3 | 4 | Switched off |
| 4 | 5 (1ms) | Switched off |
| 5 | 5 (2ms) | Switched off |
| 6 | 5 (5ms) | Switched off |
| 7 | 5 (10ms) | Switched off |
| 8 | 1 | Active |
| 9 | 2 | Active |
| A | 3 | Active |
| B | 4 | Active |
| C | 5 (1ms) | Active |
| D | 5 (2ms) | Active |
| E | 5 (5ms) | Active |
| F | 5 (10ms) | Active |

Please note that every change of the inputs is evaluated directly in the first 8 switch positions. This mode is practical if the inputs are connected to the outputs of a control and SPEEDY is required to provide an immediate response.
If interference suppression is activated, the input signals are filtered which leads to a delay (propagation time input --> output) of approx. 1 ms.
This operating mode is practical if the inputs are switched by a relay or if the input lines are subject to very strong interference.

## 5.2 Switching mode 1

In switching mode 1, input 1 is switched to output 1 and input 2 is switched to output 2. The duration of the overexcitation pulse is set at the inputs 3 and 4.

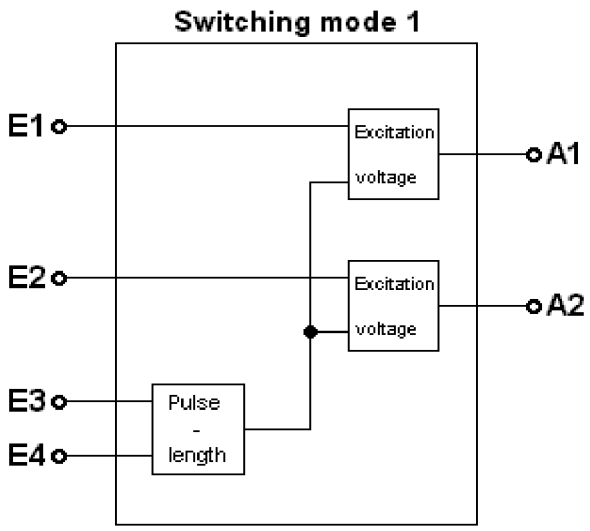


**Picture 2: Switching mode 1**

| Input 3 | Input 4 | Pulse |
|---|---|---|
| 0 VDC | 0 VDC | 1 ms |
| +24 VDC | 0 VDC | 2 ms |
| 0 VDC | +24 VDC | 5 ms |
| +24 VDC | +24 VDC | 10 ms |

## 5.3 Switching mode 2

In switching mode 2, input 1 is switched to output 1 and input 2 is switched to output 2. Input 3 is an Enable input. If there is no signal at input 3, input 1 and input 2 are inoperable. The duration of the overexcitation pulses is set at input 4.

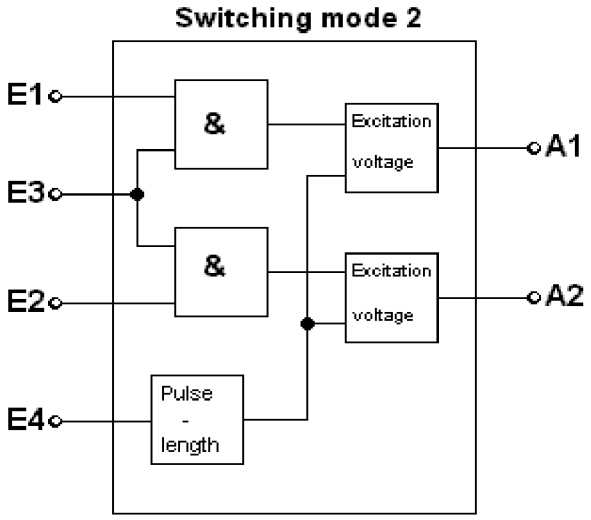


**Picture 3: Switching mode 2**

| Input 1 | Input 2 | Input 3 | Output 1 | Output 2 |
|---|---|---|---|---|
| 0 VDC | 0 VDC | 0 VDC | 0 VDC | 0 VDC |
| +24 VDC | 0 VDC | 0 VDC | 0 VDC | 0 VDC |
| 0 VDC | +24 VDC | 0 VDC | 0 VDC | 0 VDC |
| +24 VDC | +24 VDC | 0 VDC | 0 VDC | 0 VDC |
| 0 VDC | 0 VDC | +24 VDC | 0 VDC | 0 VDC |
| +24 VDC | 0 VDC | +24 VDC | +UB | 0 VDC |
| 0 VDC | +24 VDC | +24 VDC | 0V | +UB |
| +24 VDC | +24 VDC | +24 VDC | +UB | +UB |

| Input 4 | Pulse |
|---|---|
| 0 VDC | 2 ms |
| +24 VDC | 5 ms |

## 5.4 Switching mode 3

Switching mode 3 was developed specifically for twin solenoids (actuating elements). If input 1 has no signal, output 2 is switched. If input 1 receives a signal, output 2 is deactivated first. After deactivation, there is a pause **. Output 1 is then activated.
The situation is different if the signal at input 1 is cancelled. Output 1 is deactivated first, followed by a pause **, after which (not before) output 2 is switched back on. Input 2 determines the duration of the pause **. The duration of the overexcitation pulse is set at inputs 3 and 4.

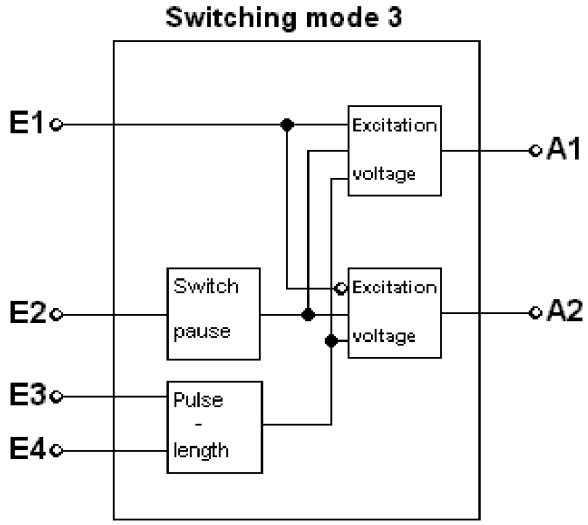


**Picture 4: Switching mode 3**

| Input 1 | Output 1 | Output 2 |
|---|---|---|
| 0 VDC | 0 VDC | +UB |
| +24 VDC | +UB | 0 VDC |

| Input 3 | Input 4 | Pulse |
|---|---|---|
| 0 VDC | 0 VDC | 1 ms |
| +24 VDC | 0 VDC | 2 ms |
| 0 VDC | +24 VDC | 5 ms |
| +24 VDC | +24 VDC | 10 ms |

| Input 2 | Pause ** |
|---|---|
| 0 VDC | Pulse x 2 |
| +24 VDC | Pulse x 1 |

** Pause: Period between de-energisation of solenoid 1 and energisation of solenoid 2 or vice versa. It results from the overexcitation time (pulse) multiplied by 2 or 1.

## 5.5 Switching mode 4

Switching mode 4 includes an RS flip-flop logic (RESET/SET logic). If 24 V is applied to input 2 (RESET) after power-up, output 2 is switched. If 24 V is also applied to input 1 (SET), output 1 is switched and output 2 is deactivated. When the signal input 1 (SET) is cancelled again, this state remains stable at the outputs. If the signal is now cancelled at input 2 (RESET) (0 V DC), output 1 is deactivated and output 2 is activated. This circuit state remains stable even if input 2 receives a signal again (+24 V DC). Input 2 (RESET) has priority over input 1 (SET), i. e. if input 1 has a signal (+24 V DC) and input 2 has no signal (0 V DC), output 2 is switched and output 1 is deactivated. The duration of the overexcitation pulse is set at inputs 3 and 4 (terminals 3 and 4).

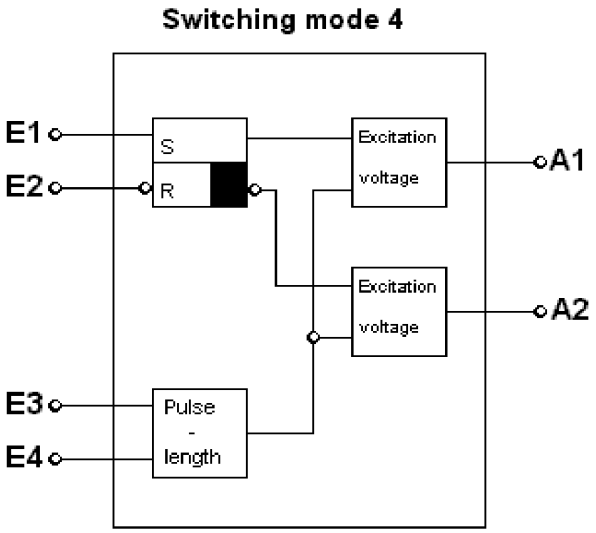


**Picture 5: Switching mode 4**

| Input 1 | Input 2 | Output 1 | Output 2 |
|---|---|---|---|
| 0 VDC | 0 VDC | 0 VDC | +UB |
| +24 VDC | 0 VDC | 0 VDC | +UB |
| 0 VDC | +24 VDC | Unchanged | Unchanged |
| +24 VDC | +24 VDC | +UB | 0 VDC |

| Input 3 | Input 4 | Pulse |
|---|---|---|
| 0 VDC | 0 VDC | 1 ms |
| +24 VDC | 0 VDC | 2 ms |
| 0 VDC | +24 VDC | 5 ms |
| +24 VDC | +24 VDC | 10 ms |

## 5.6 Switching mode 5

Switching mode 5 also includes an RS flip-flop which is set via inputs 1 and 2 and reset via inputs 3 and 4 (cf. description in switching mode 4). The pulse length is set via the rotary coding switch, with the following assignment:

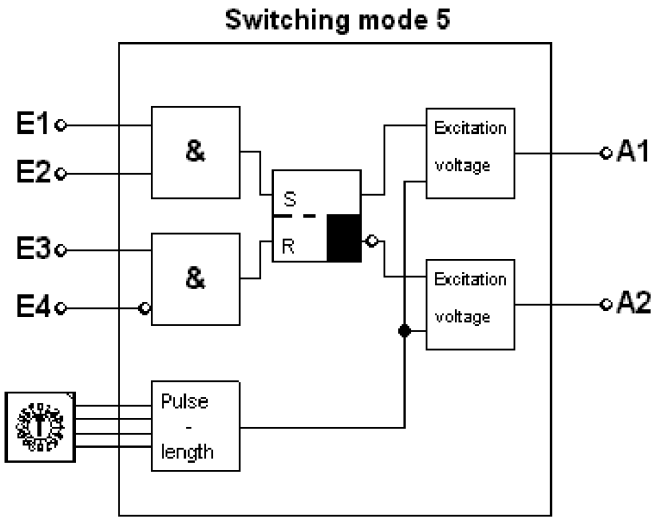


**Picture 6: Switching mode 5**

| Rotary switch indication | Pulse |
|---|---|
| 4 or C (see chapter 5.1) | 1ms |
| 5 or D (see chapter 5.1) | 2ms |
| 6 or E (see chapter 5.1) | 5ms |
| 7 or F (see chapter 5.1) | 10ms |

| Input 1 | Input 2 | Input 3 | Input 4 | Output 1 | Output 2 |
|---|---|---|---|---|---|
| 0 VDC | 0 VDC | 0 VDC | 0 VDC | Unchanged | Unchanged |
| +24 VDC | 0 VDC | 0 VDC | 0 VDC | Unchanged | Unchanged |
| 0 VDC | +24 VDC | 0 VDC | 0 VDC | Unchanged | Unchanged |
| +24 VDC | +24 VDC | 0 VDC | 0 VDC | +UB | 0 VDC |
| 0 VDC | 0 VDC | +24 VDC | 0 VDC | 0 VDC | +UB |
| +24 VDC | 0 VDC | +24 VDC | 0 VDC | 0 VDC | +UB |
| 0 VDC | +24 VDC | +24 VDC | 0 VDC | 0 VDC | +UB |
| +24 VDC | +24 VDC | +24 VDC | 0 VDC | 0 VDC | +UB |
| 0 VDC | 0 VDC | 0 VDC | +24 VDC | Unchanged | Unchanged |
| +24 VDC | 0 VDC | 0 VDC | +24 VDC | Unchanged | Unchanged |
| 0 VDC | +24 VDC | 0 VDC | +24 VDC | Unchanged | Unchanged |
| +24 VDC | +24 VDC | 0 VDC | +24 VDC | +UB | 0 VDC |
| 0 VDC | 0 VDC | +24 VDC | +24 VDC | Unchanged | Unchanged |
| +24 VDC | 0 VDC | +24 VDC | +24 VDC | Unchanged | Unchanged |
| 0 VDC | +24 VDC | +24 VDC | +24 VDC | Unchanged | Unchanged |
| +24 VDC | +24 VDC | +24 VDC | +24 VDC | +UB | 0 VDC |

# 6 Commissioning and optimisation of the switching time

First, the inputs, outputs and the supply voltage for SPEEDY must be wired. When doing this, please note that the inputs feature optocouplers and a separate GND input.
Then set the required switching mode with the rotary coding switch. If optimisation has not yet been carried out, the overexcitation time should be set to the minimum value (1 ms).
When all preparations are complete, you can connect the supply voltage to SPEEDY.

For optimisation, the time of the overvoltage pulse can now be incremented step by step until no further improvement of the switching time is reached.

**ATTENTION:**
**Increasing the pulse time further does not have any positive effect and simply unnecessarily loads the switching elements.**

Note:
The switch-off delay can be reduced without affecting the switch-on delay by reducing the holding voltage (e. g. 12V instead of 24V).

## 6.1 Recovery times of SPEEDY

The overexcitation voltage of 100 V is generated internally by SPEEDY and buffered in a capacitor. The capacitor is partially discharged when a pulse is issued and a "recovery time" is required until the capacitor has fully recharged. This recovery time is specified in the table below:

| Current (mA) | 1ms-pulse | 2ms-pulse | 5ms-pulse | 10ms-pulse |
|---|---|---|---|---|
| 0 | 0 ms | 0 ms | 0 ms | 0 ms |
| 100 | 1 ms | 2 ms | 6 ms | 13 ms |
| 200 | 2 ms | 4 ms | 12 ms | 26 ms |
| 300 | 2 ms | 5 ms | 17 ms | 39 ms |
| 400 | 3 ms | 7 ms | 23 ms | 52 ms |
| 500 | 3 ms | 9 ms | 29 ms | 65 ms |
| 600 | 4 ms | 11 ms | 35 ms | 78 ms |
| 700 | 4 ms | 12 ms | 41 ms | 91 ms |
| 800 | 5 ms | 14 ms | 47 ms | 104 ms |
| 900 | 5 ms | 15 ms | 52 ms | 117 ms |
| 1000 | 6 ms | 17 ms | 58 ms | 130 ms |
| 1500 | 28 ms | 60 ms | 117 ms | 170 ms |
| 2000 | 34 ms | 70 ms | 130 ms | 180 ms |
| 3000 | 50 ms | 94 ms | 160 ms | 200 ms |

Please note that the recovery time always applies to both outputs, i. e. if both outputs are switched simultaneously, the total of the two output currents must be allowed for as the current in the table.
If both outputs are switched time-delayed, only the time between the switch-off edge of the first output’s over-current impulse and the switch-on edge of the next output has to be taken into consideration as the recovery time.

# 7 Technical data

## 7.1 SPEEDY-100V

| | SPEEDY-100V-1A | SPEEDY-100V-4A |
|---|---|---|
| **Operating voltage** | 10... 30V, max 1 W (unloaded) | 10... 30V, max 1 W (unloaded) |
| **Current consumption** | Max. 40mA (idle state)<br>max. 3A (at switching instant) | Max. 40mA (idle state)<br>max. 3A (at switching instant) |
| **Inputs** | 4<br>$R_i$ > 3.9 kΩ<br>$U_L$ = OV - 3V, $U_H$ = 12V - 30V | 4<br>$R_i$ > 3.9 kΩ<br>$U_L$ = OV - 3V, $U_H$ = 12V - 3V |
| **Outputs** | 2<br>$I_{out}$ < 1A steady load<br>$U_{out\text{-}Stat}$ > operating voltage - 1V<br>$U_{out\text{-}pulse}$ = 88V .. 100V | 2<br>$I_{out}$ 4A steady load / temporarily 5A (max. 1min.)<br>$U_{out\text{-}Stat}$ > operating voltage - 1V<br>$U_{out\text{-}pulse}$ = 88V .. 100V |
| **Programs** | Can be set via 5 rotary switches<br>other customized programs on request | Can be set via 5 rotary switches<br>other customized programs on request |
| **Pulse length** | Can be set 1 - 10ms | Can be set 1 - 10ms |
| **Switching delay** | < 300 µs (without input interference suppression) | < 300 µs (without input interference suppression) |
| **Recovery time** | Max. 150ms at 1A load and 10ms pulse | Max. 200ms at 3A load and 10ms pulse |
| **Housing** | Plastic for EN mounting rail mounting (can be lined up)<br>W x H x D: 25 x 79 x 90.5mm | Plastic for EN mounting rail mounting (can be lined up)<br>W x H x D: 25 x 79 x 90.5mm |
| **Conductor connection** | Via plug terminal block up to 2.5mm$^2$ | Via plug terminal block up to 2.5mm$^2$ |
| **Display** | Optional LED status display of the inputs, outputs and supply voltages | Optional LED status display of the inputs, outputs and supply voltages |

## 7.2 SPEEDY-50V

| | SPEEDY-50V-1A | SPEEDY-50V-4A |
|---|---|---|
| **Operating voltage** | 10... 30V, max 1 W (unloaded) | 10... 30V, max 1 W (unloaded) |
| **Current consumption** | Max. 40mA (idle state)<br>max. 3A (at switching instant) | Max. 40mA (idle state)<br>max. 3A (at switching instant) |
| **Inputs** | 4<br>$R_i$ > 3.9 kΩ<br>$U_L$ = OV - 3V, $U_H$ = 12V - 30V | 4<br>$R_i$ > 3.9 kΩ<br>$U_L$ = OV - 3V, $U_H$ = 12V - 3V |
| **Outputs** | 2<br>$I_{out}$ < 1A steady load<br>$U_{out\text{-}Stat}$ > operating voltage - 1V<br>$U_{out\text{-}pulse}$ = 44V .. 50V | 2<br>$I_{out}$ 4A steady load / temporarily 5A (max. 1min.)<br>$U_{out\text{-}Stat}$ > operating voltage - 1V<br>$U_{out\text{-}pulse}$ = 44V .. 50V |
| **Programs** | Can be set via 5 rotary switches<br>other customized programs on request | Can be set via 5 rotary switches<br>other customized programs on request |
| **Pulse length** | Can be set 1 - 10ms | Can be set 1 - 10ms |
| **Switching delay** | < 300 µs (without input interference suppression) | < 300 µs (without input interference suppression) |
| **Recovery time** | Max. 150ms at 1A load and 10ms pulse | Max. 200ms at 3A load and 10ms pulse |
| **Housing** | Plastic for EN mounting rail mounting (can be lined up)<br>W x H x D: 25 x 79 x 90.5mm | Plastic for EN mounting rail mounting (can be lined up)<br>W x H x D: 25 x 79 x 90.5mm |
| **Conductor connection** | Via plug terminal block up to 2.5mm$^2$ | Via plug terminal block up to 2.5mm$^2$ |
| **Display** | Optional LED status display of the inputs, outputs and supply voltages | Optional LED status display of the inputs, outputs and supply voltages |

# 8 Servicing

Should questions arise that are not covered in this manual you can find further information in our

- FAQ/Wiki area on our homepage www.deutschmann.com or directly in our Wiki on www.wiki.deutschmann.de
- Corresponding Manual of the used Cam Control

If your questions are still unanswered please contact the responsible sales partner (see www.deutschmann.com) or contact us directly.

Please note down the following information before calling:

- Device designation
- Serial number (S/N)
- Article number
- Error number and error description

Your request will be recorded in the Support center and will be processed by our Support Team as quickly as possible (Usually in 1 working day, rarely more than 3 working days.).

Technical Support hours are as follows:
Monday to Thursday from 8 am to midday and from 1 pm to 4 pm, Friday from 8 am to midday (CET).

Deutschmann Automation GmbH & Co. KG
Carl-Zeiss-Straße 8
D-65520 Bad-Camberg
Germany

| | |
|---|---|
| Central office and sales department | +49 6434 9433-0 |
| Technical Support | +49 6434 9433-33 |
| Fax sales department | +49 6434 9433-40 |
| Fax Technical Support | +49 6434 9433-44 |
| E-mail Technical Support | support@deutschmann.de |


## 8.1 Returning a unit

If you return a unit to us, we require as comprehensive a description of the error as possible. We require the following information in particular:

- What error number was displayed?
- How is the unit externally wired (encoders, outputs, ..)? Please state all connections of the unit.
- What is the magnitude of the 24V supply voltage (± 0.5V) with connected SPEEDY?
- What were you last doing on the unit (programming, error on power-up, ...)?

The more precise your information and error description, the more precisely we can check the possible causes.

Devices, that are sent in without an error description undergo a standard test. You have to bear the costs for that test even though no defect was found.

## 8.2 Internet

The current software WINLOC32 is available for download from our Internet-homepage www.deutschmann.com. There you can also find topical information on Deutschmann products, instruction manuals and a list of our distribution partners.